NOTES:
1. ALL DIMENSIONS FOR REFERENCE ONLY
2. REFER TO AIR LOGIC'S POLYSULFONE APPLICATION GUIDE
3. TUBE RETENTION PRESSURE SUBJECT TO TUBING DIMENSION AND STIFFNESS

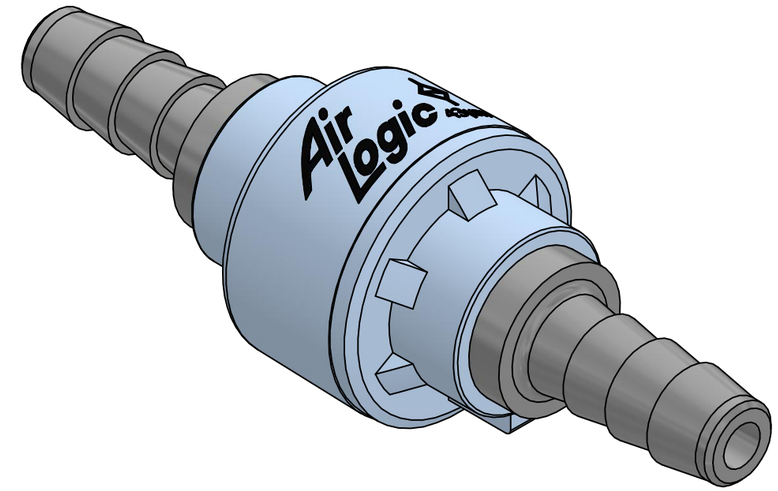

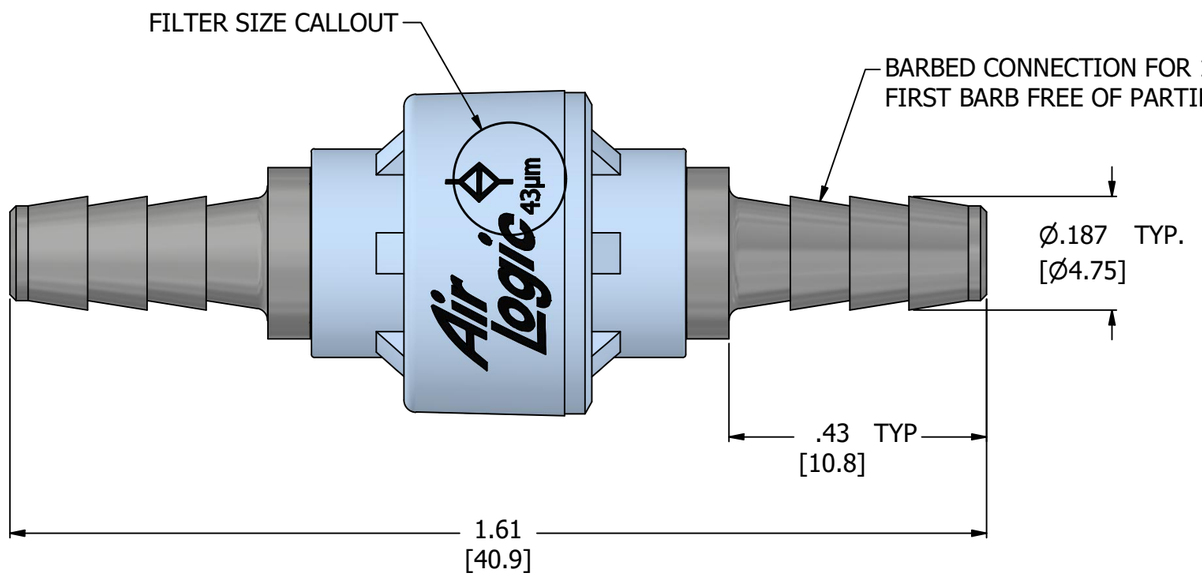

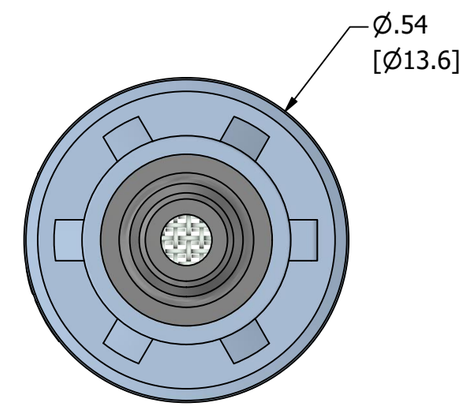

PRODUCT SPECIFICATIONS	
COLOR(S)	LIGHT BLUE, BLACK
FILTER AREA	.164 in^2, [105 mm^2]
FILTER SIZE	43 MICRON
MEDIA	GASES, LIQUIDS, NOTE 2
MAX INLET PRESSURE	125 PSI, [8.6 BAR]
TYPICAL TUBE RETENTION PRESSURE	125 PSI, [8.6 BAR], NOTE 3
MINIMUM INNER DIAMETER	Ø.08 [Ø2.03]
WETTED MATERIALS	POLYSULFONE, STAINLESS STEEL

AIR-LOGIC ® DIVISION OF KNAPP MFG, INC.
5102 DOUGLAS AVE RACINE, WI 53402
PHONE: (262) 639-9035 FAX: (262) 639-5996 WEB: AIR-LOGIC.COM

PART/DRAWING NO.:
F97043P85

DESCRIPTION:
INLINE FILTER, 43 MICRON, 1/8" BARBS

REVISION: D	DRAWN: 8/5/2026
SCALE: 4 : 1	SHEET SIZE: B

TERMS OF USE:
THIS DRAWING IS FOR INFORMATIONAL PURPOSES ONLY. AIR LOGIC MAKES NO REPRESENTATIONS OF WARRANTIES CONCERNING SUITABILITY FOR ANY PARTICULAR PURPOSE. ALL PRODUCTS SUPPLIED ARE SUBJECT TO TERMS AND CONDITIONS FOUND AT AIR-LOGIC.COM

DRAWING TAKES PRECEDENCE OVER 3D MODEL GEOMETRY

TOLERANCE: DECIMALS .00 ± .01, .000 ± .005, FRACTIONS ± 1/64
ANGLES 1/4° UNLESS OTHERWISE SPECIFIED
UNITS: INCHES [MILLIMETERS]